UNIVERSITY OF CAMBRIDGE INTERNATIONAL EXAMINATIONS
General Certificate of Education Advanced Level

CANDIDATE NAME

CENTRE NUMBER

CANDIDATE NUMBER

3242847993

PHYSICS **9702/43**

Paper 4 A2 Structured Questions **October/November 2012**

2 hours

Candidates answer on the Question Paper.

No Additional Materials are required.

READ THESE INSTRUCTIONS FIRST

Write your Centre number, candidate number and name on all the work you hand in.
Write in dark blue or black pen.
You may use a soft pencil for any diagrams, graphs or rough working.
Do not use staples, paper clips, highlighters, glue or correction fluid.
DO **NOT** WRITE IN ANY BARCODES.

Answer **all** questions.
You may lose marks if you do not show your working or if you do not use appropriate units.

At the end of the examination, fasten all your work securely together.
The number of marks is given in brackets [ ] at the end of each question or part question.

For Examiner's Use	
1	
2	
3	
4	
5	
6	
7	
8	
9	
10	
11	
12	
Total	

This document consists of **22** printed pages and **2** blank pages.

© UCLES 2012

Data

speed of light in free space,	$c = 3.00 \times 10^{8}\ \text{m s}^{-1}$
permeability of free space,	$\mu_0 = 4\pi \times 10^{-7}\ \text{H m}^{-1}$
permittivity of free space,	$\varepsilon_0 = 8.85 \times 10^{-12}\ \text{F m}^{-1}$
elementary charge,	$e = 1.60 \times 10^{-19}\ \text{C}$
the Planck constant,	$h = 6.63 \times 10^{-34}\ \text{J s}$
unified atomic mass constant,	$u = 1.66 \times 10^{-27}\ \text{kg}$
rest mass of electron,	$m_e = 9.11 \times 10^{-31}\ \text{kg}$
rest mass of proton,	$m_p = 1.67 \times 10^{-27}\ \text{kg}$
molar gas constant,	$R = 8.31\ \text{J K}^{-1}\ \text{mol}^{-1}$
the Avogadro constant,	$N_A = 6.02 \times 10^{23}\ \text{mol}^{-1}$
the Boltzmann constant,	$k = 1.38 \times 10^{-23}\ \text{J K}^{-1}$
gravitational constant,	$G = 6.67 \times 10^{-11}\ \text{N m}^2\ \text{kg}^{-2}$
acceleration of free fall,	$g = 9.81\ \text{m s}^{-2}$

© UCLES 2012

Formulae

uniformly accelerated motion, $s = ut + \frac{1}{2}at^2$
$v^2 = u^2 + 2as$

work done on/by a gas, $W = p\Delta V$

gravitational potential, $\phi = -\frac{Gm}{r}$

hydrostatic pressure, $p = \rho gh$

pressure of an ideal gas, $p = \frac{1}{3}\frac{Nm}{V}\langle c^2 \rangle$

simple harmonic motion, $a = -\omega^2 x$

velocity of particle in s.h.m., $v = v_0 \cos \omega t$
$v = \pm \omega\sqrt{(x_0^2 - x^2)}$

electric potential, $V = \frac{Q}{4\pi\varepsilon_0 r}$

capacitors in series, $1/C = 1/C_1 + 1/C_2 + \ldots$

capacitors in parallel, $C = C_1 + C_2 + \ldots$

energy of charged capacitor, $W = \frac{1}{2}QV$

resistors in series, $R = R_1 + R_2 + \ldots$

resistors in parallel, $1/R = 1/R_1 + 1/R_2 + \ldots$

alternating current/voltage, $x = x_0 \sin \omega t$

radioactive decay, $x = x_0 \exp(-\lambda t)$

decay constant, $\lambda = \frac{0.693}{t_{\frac{1}{2}}}$

© UCLES 2012

[Turn over

Section A

Answer **all** the questions in the spaces provided.

1 An ideal gas has volume V and pressure p. For this gas, the product pV is given by the expression

$$pV = \frac{1}{3}Nm\langle c^2\rangle$$

where m is the mass of a molecule of the gas.

(a) State the meaning of the symbol

(i) N,

.....[1]

(ii) $\langle c^2\rangle$.

.....[1]

(b) A gas cylinder of volume $2.1 \times 10^4\,\text{cm}^3$ contains helium-4 gas at pressure 6.1×10^5 Pa and temperature 12 °C. Helium-4 may be assumed to be an ideal gas.

(i) Determine, for the helium gas,

1. the amount, in mol,

amount = ... mol [3]

2. the number of atoms.

number = ...[2]

© UCLES 2012

(ii) Calculate the root-mean-square (r.m.s.) speed of the helium atoms.

r.m.s. speed = ... $m\,s^{-1}$ [3]

2 A small frictionless trolley is attached to a fixed point A by means of a spring. A second spring is used to attach the trolley to a variable frequency oscillator, as shown in Fig. 2.1.

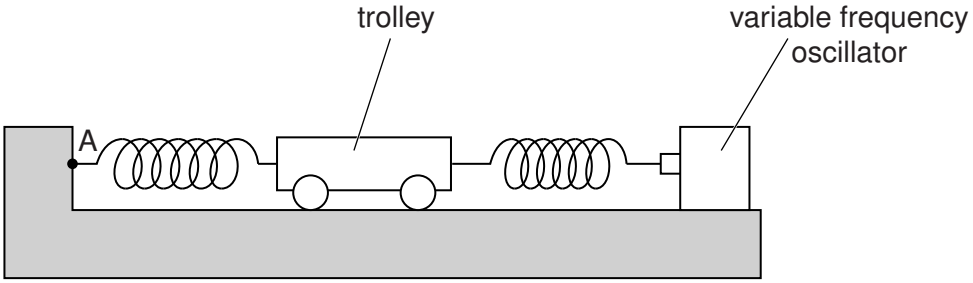

Fig. 2.1

Both springs remain extended within the limit of proportionality.
Initially, the oscillator is switched off. The trolley is displaced horizontally along the line joining the two springs and is then released.
The variation with time t of the velocity v of the trolley is shown in Fig. 2.2.

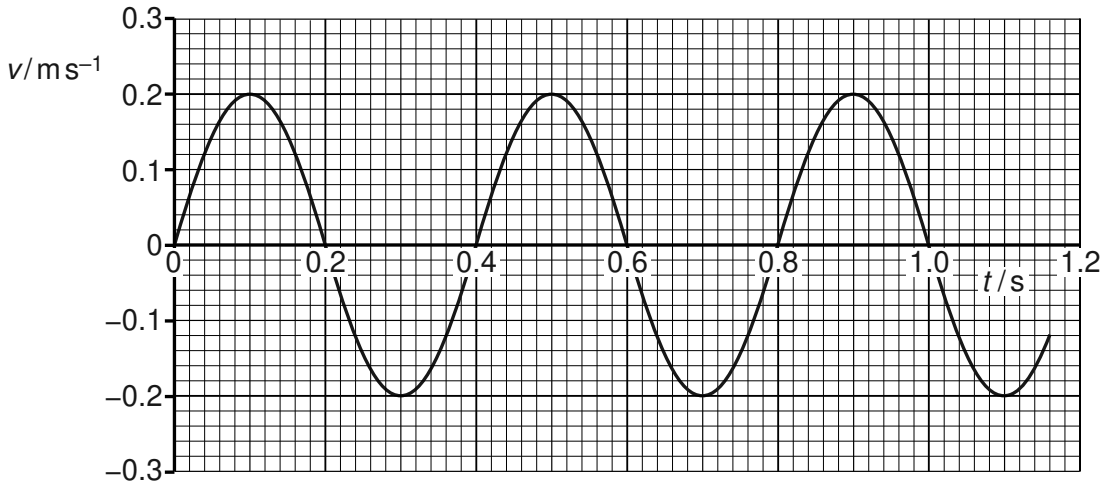

Fig. 2.2

(a) (i) Using Fig. 2.2, state two different times at which

1. the displacement of the trolley is zero,

time = ... s and time = ... s [1]

2. the acceleration in one direction is maximum.

time = ... s and time = ... s [1]

(ii) Determine the frequency of oscillation of the trolley.

frequency = ... Hz [2]

(iii) The variation with time of the displacement of the trolley is sinusoidal. The variation with time of the velocity of the trolley is also sinusoidal.

State the phase difference between the displacement and the velocity.

phase difference = ... [1]

(b) The oscillator is now switched on. The amplitude of vibration of the oscillator is constant. The frequency f of vibration of the oscillator is varied.
The trolley is forced to oscillate by means of vibrations of the oscillator.
The variation with f of the amplitude a_0 of the oscillations of the trolley is shown in Fig. 2.3.

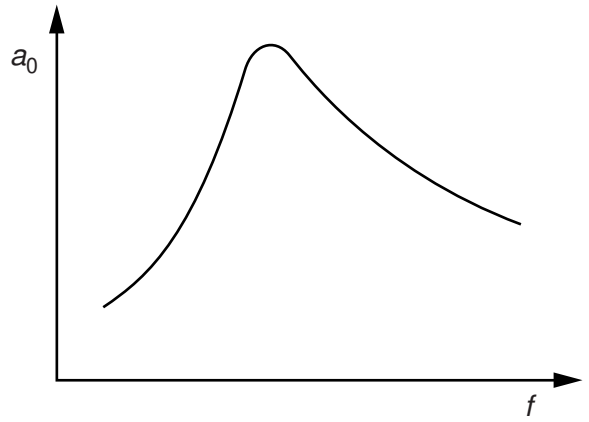

Fig. 2.3

By reference to your answer in **(a)**, state the approximate frequency at which the amplitude is maximum.

frequency = ... Hz [1]

(c) The amplitude of the oscillations in **(b)** may be reduced without changing significantly the frequency at which the amplitude is a maximum. State how this may be done and give a reason for your answer.
You may draw on Fig. 2.1 if you wish.

.....

.....

.....

.....

.....[2]

3 **(a)** State what is meant by a line of force in

(i) a gravitational field,

.....

.....[1]

(ii) an electric field.

.....

.....[2]

(b) A charged metal sphere is isolated in space.
State one similarity and one difference between the gravitational force field and the electric force field around the sphere.

similarity: .....

.....

difference: .....

.....

.....
[3]

(c) Two horizontal metal plates are separated by a distance of 1.8 cm in a vacuum.
A potential difference of 270 V is maintained between the plates, as shown in Fig. 3.1.

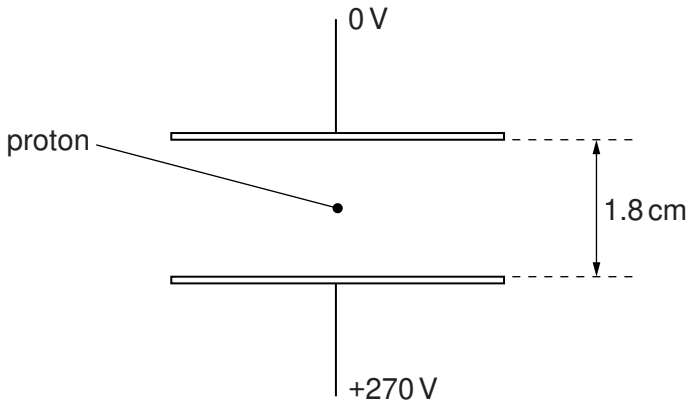

Fig. 3.1

A proton is in the space between the plates.
Explain quantitatively why, when predicting the motion of the proton between the plates, the gravitational field is not taken into consideration.

[4]

4 A proton of mass m and charge $+q$ is travelling through a vacuum in a straight line with speed v.
It enters a region of uniform magnetic field of magnetic flux density B, as shown in Fig. 4.1.

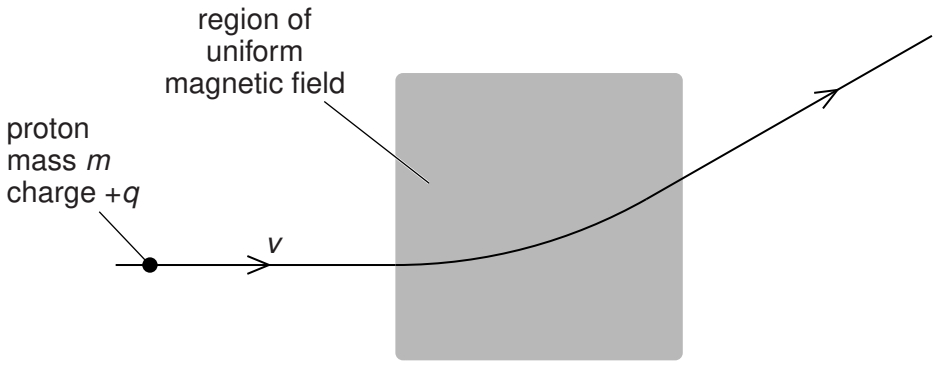

Fig. 4.1

The magnetic field is normal to the direction of motion of the proton.

(a) Explain why the path of the proton in the magnetic field is an arc of a circle.

.....

.....

.....[2]

(b) The angular speed of the proton in the magnetic field is ω.
Derive an expression for ω in terms of B, q and m.

[4]

5 **(a)** State the relation between magnetic flux density B and magnetic flux Φ, explaining any other symbols you use.

.....

.....

.....[2]

(b) A large horseshoe magnet has a uniform magnetic field between its poles. The magnetic field is zero outside the space between the poles.
A small Hall probe is moved at constant speed along a line XY that is midway between, and parallel to, the faces of the poles of the magnet, as shown in Fig. 5.1.

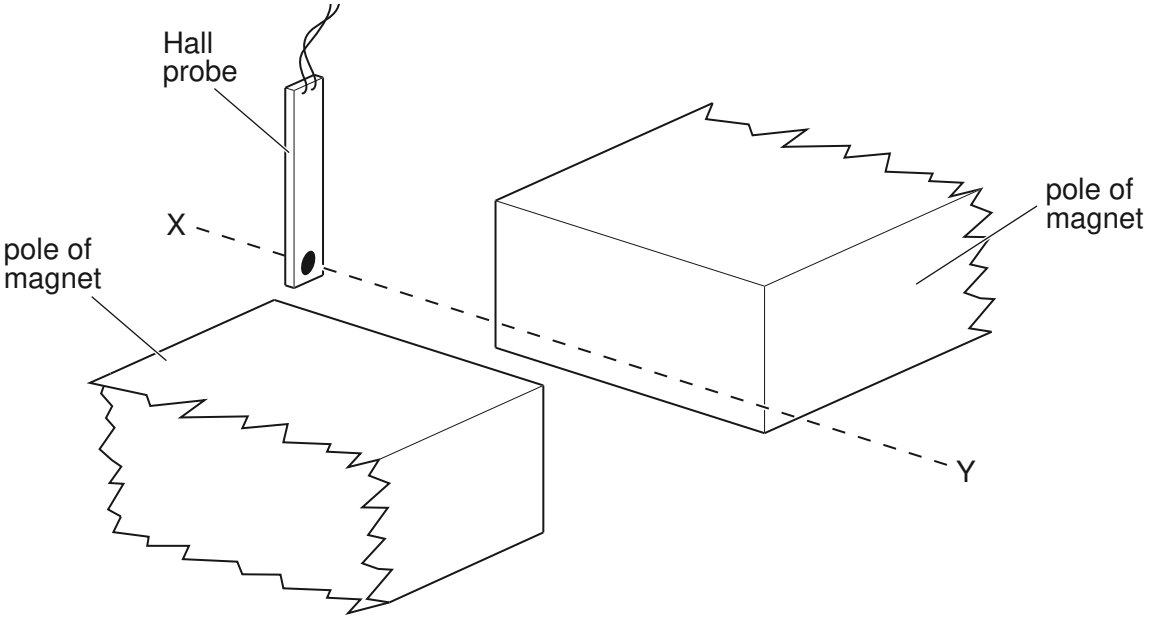

Fig. 5.1

An e.m.f. is produced by the Hall probe when it is in the magnetic field.
The angle between the plane of the probe and the direction of the magnetic field is not varied.

On the axes of Fig. 5.2, sketch a graph to show the variation with time t of the e.m.f. V_H produced by the Hall probe.

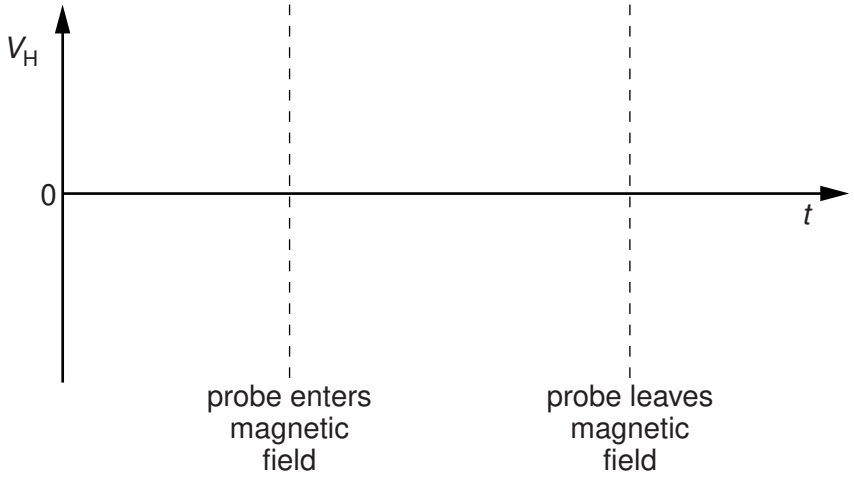

Fig. 5.2

[2]

(c) (i) State Faraday's law of electromagnetic induction.

.....

.....

.....[2]

(ii) The Hall probe in **(b)** is replaced by a small flat coil of wire. The coil is moved at constant speed along the line XY. The plane of the coil is parallel to the faces of the poles of the magnet.

On the axes of Fig. 5.3, sketch a graph to show the variation with time t of the e.m.f. E induced in the coil.

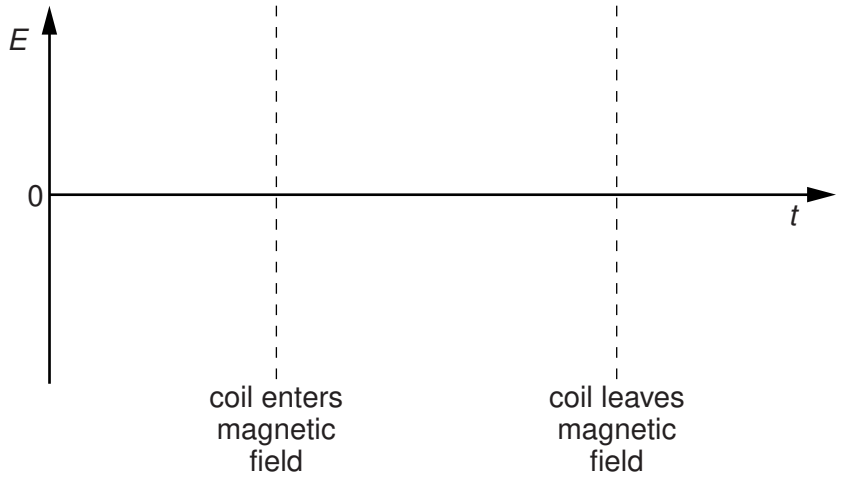

Fig. 5.3

[3]

6 A bridge rectifier consists of four ideal diodes A, B, C and D, connected as shown in Fig. 6.1.

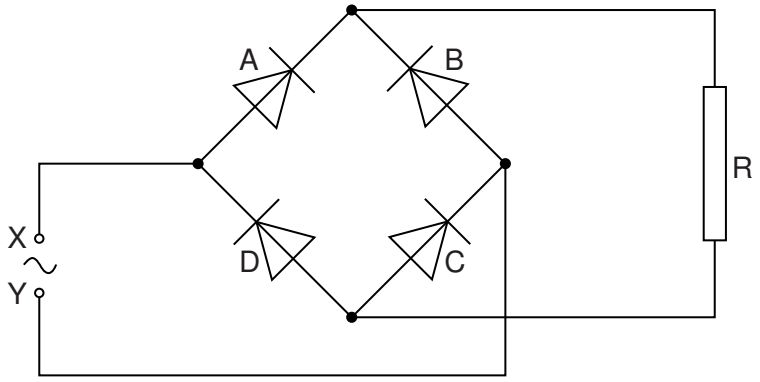

Fig. 6.1

An alternating supply is applied between the terminals X and Y.

(a) **(i)** On Fig. 6.1, label the positive (+) connection to the load resistor R. [1]

(ii) State which diodes are conducting when terminal Y of the supply is positive.

diode ..... and diode .....[1]

(b) The variation with time t of the potential difference V across the load resistor R is shown in Fig. 6.2.

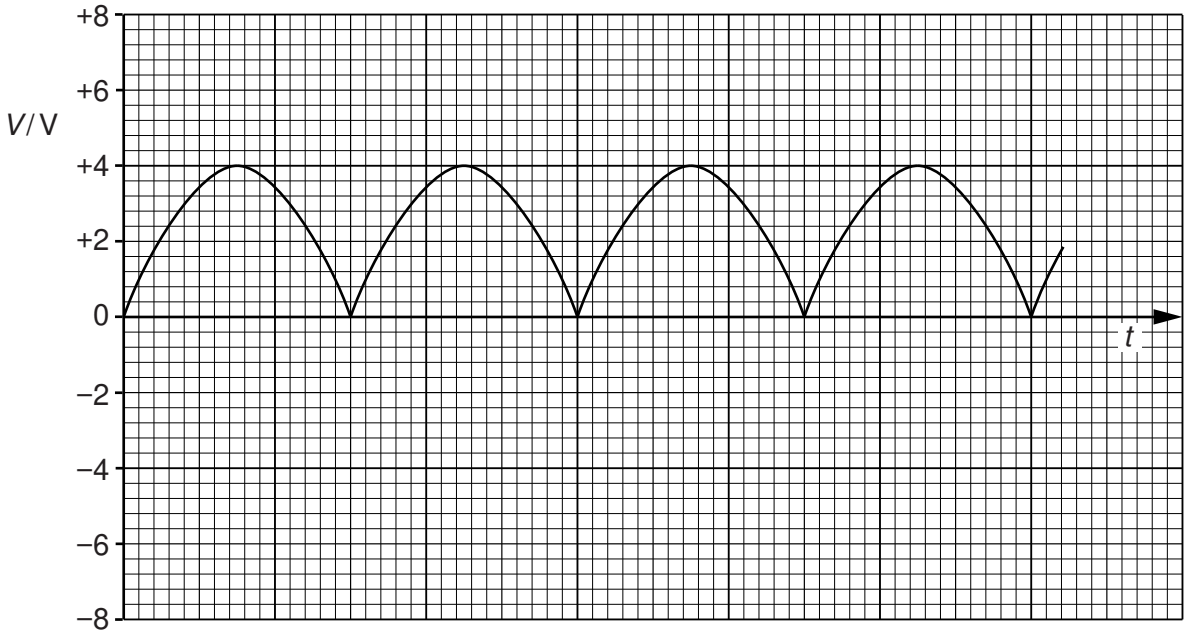

Fig. 6.2

© UCLES 2012

The load resistor R has resistance 2700 Ω.

(i) Use Fig. 6.2 to determine the mean power dissipated in the resistor R.

power = ... W [3]

(ii) On Fig. 6.1, draw the symbol for a capacitor, connected so as to increase the mean power dissipated in the resistor R. [1]

(c) The capacitor in **(b)(ii)** is now removed from the circuit.
The diode A in Fig. 6.1 stops functioning, so that it now has infinite resistance.

On Fig. 6.2, draw the variation with time *t* of the new potential difference across the resistor R. [2]

7 **(a)** State what is meant by the *de Broglie wavelength*.

.....

.....

.....[2]

(b) An electron is accelerated from rest in a vacuum through a potential difference of 4.7 kV.

(i) Calculate the de Broglie wavelength of the accelerated electron.

wavelength = ... m [5]

(ii) By reference to your answer in **(i)**, suggest why such electrons may assist with an understanding of crystal structure.

.....

.....

.....

.....[2]

© UCLES 2012

8 When a neutron is captured by a uranium-235 nucleus, the outcome may be represented by the nuclear equation shown below.

$$^{235}_{92}\mathrm{U} + ^{1}_{0}\mathrm{n} \rightarrow ^{95}_{42}\mathrm{Mo} + ^{139}_{57}\mathrm{La} + x\,^{1}_{0}\mathrm{n} + 7\,^{0}_{-1}\mathrm{e}$$

(a) (i) Use the equation to determine the value of x.

x = ...[1]

(ii) State the name of the particle represented by the symbol $^{0}_{-1}\mathrm{e}$.

.....[1]

(b) Some data for the nuclei in the reaction are given in Fig. 8.1.

	mass / u	binding energy per nucleon / MeV
uranium-235 ($^{235}_{92}\mathrm{U}$)	235.123	
molybdenum-95 ($^{95}_{42}\mathrm{Mo}$)	94.945	8.09
lanthanum-139 ($^{139}_{57}\mathrm{La}$)	138.955	7.92
proton ($^{1}_{1}\mathrm{p}$)	1.007	
neutron ($^{1}_{0}\mathrm{n}$)	1.009	

Fig. 8.1

Use data from Fig. 8.1 to

(i) determine the binding energy, in u, of a nucleus of uranium-235,

binding energy = ... u [3]

© UCLES 2012

(ii) show that the binding energy per nucleon of a nucleus of uranium-235 is 7.18 MeV.

[3]

(c) The kinetic energy of the neutron before the reaction is negligible.
Use data from **(b)** to calculate the total energy, in MeV, released in this reaction.

energy = ... MeV [2]

BLANK PAGE

Please turn over for Section B.

Section B

Answer **all** the questions in the spaces provided.

9 A student designs an electronic sensor to monitor whether the temperature in a refrigerator is above or below a particular value. The circuit is shown in Fig. 9.1.

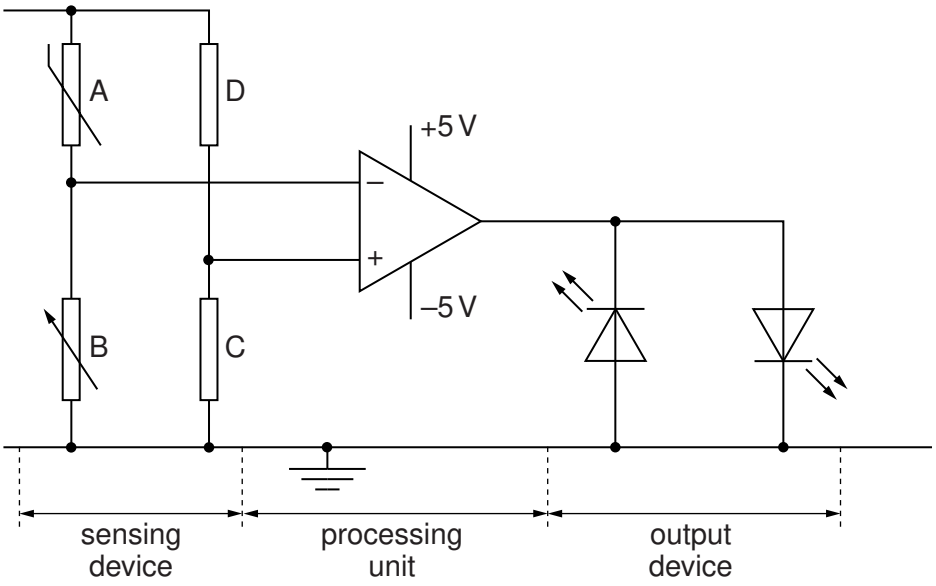

Fig. 9.1

(a) Name the components used in the output device.

.....[1]

(b) An operational amplifier (op-amp) is used as the processing unit. Describe the function of this processing unit.

.....

.....

.....[2]

(c) State the function of

(i) the resistors C and D,

.....

.....[1]

(ii) the resistor B.

.....

.....[1]

(d) The output device of the circuit in Fig. 9.1 is changed so that the new output device may be used to switch on a high-voltage circuit.

(i) State the component that is used in the new output device.

.....

.....[1]

(ii) Draw on Fig. 9.2 to show how the component in **(i)**, together with a diode, are connected so that the high voltage may be switched on when the output of the op-amp is negative.

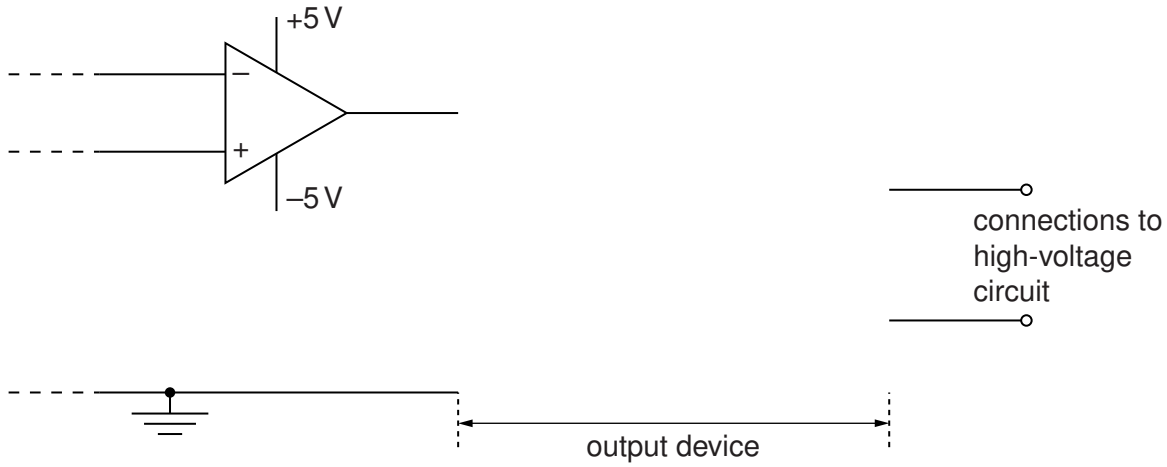

Fig. 9.2

[2]

10 A simple model of one section of a CT scan is shown in Fig. 10.1.

A	*B*
D	*C*

Fig. 10.1

The model consists of four voxels with pixel numbers *A*, *B*, *C* and *D*.

In this model, the voxels are viewed in turn along four different directions D_1, D_2, D_3 and D_4 as shown in Fig. 10.2.

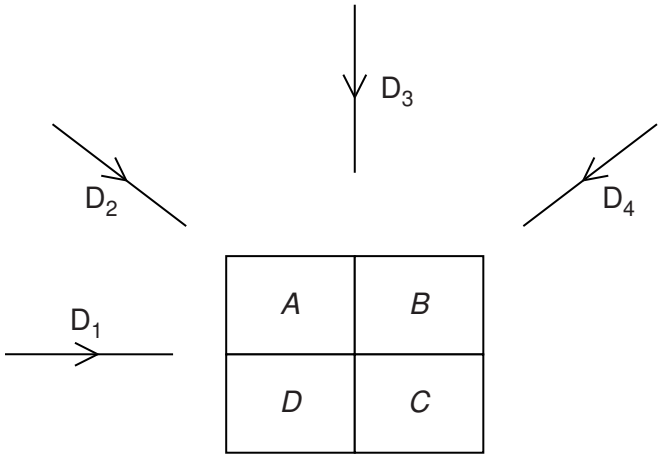

Fig. 10.2

The pixel readings in each of the four directions are noted.
The total pixel reading for any one direction is 19.
The pixel readings for all of the directions are summed to give the pattern of readings shown in Fig. 10.3.

25	34
28	46

Fig. 10.3

(a) State the background reading in this model.

background reading = ...[1]

© UCLES 2012

(b) Determine each of the pixel readings.

A = ...	*B* = ...
D = ...	*C* = ...

[4]

(c) Use your answers in **(b)** to determine the pixel readings along

(i) the direction D_3,

.....[1]

(ii) the direction D_4.

.....[2]

11 In commercial radio, transmissions are made by means of carrier waves that are modulated by the audio signals.

(a) State what is meant by a *modulated carrier* wave.

.....

.....

.....

.....[3]

(b) State three reasons why modulated carrier waves are used, rather than the direct transmission of electromagnetic waves having audio frequencies.

1. .....

.....

2. .....

.....

3. .....

.....

[3]

12 **(a)** Suggest applications, one in each case, for the transmission of signals using

(i) a wire pair,

.....[1]

(ii) a coaxial cable,

.....[1]

(iii) a microwave link.

.....[1]

(b) A cable used for the transmission of a signal has an attenuation per unit length of 2.1 dB km^{-1}. There are no amplifiers along the cable.
The input power of the signal is 450 mW.

(i) Calculate the output power of the signal for the cable of length 40 km.

output power = ... W [3]

(ii) The minimum acceptable signal power in the cable is 7.2×10^{-11} W.
Calculate the maximum uninterrupted length of the cable.

length = ... km [2]

© UCLES 2012

BLANK PAGE

Permission to reproduce items where third-party owned material protected by copyright is included has been sought and cleared where possible. Every reasonable effort has been made by the publisher (UCLES) to trace copyright holders, but if any items requiring clearance have unwittingly been included, the publisher will be pleased to make amends at the earliest possible opportunity.

University of Cambridge International Examinations is part of the Cambridge Assessment Group. Cambridge Assessment is the brand name of University of Cambridge Local Examinations Syndicate (UCLES), which is itself a department of the University of Cambridge.